Automated Dispensing System

Senior Design Project - Background

- Integration of refrigeration, pumping, and reservoir systems for biological lab use
  - Storage of 6x 500ml fluid bottles to under 4C
  - Pump to 0.1 – 0.5 ml accuracy
  - Sustain operations with minimal human intervention
- Responsible for:
  - Thermoelectric Refrigeration (Team of 2)
  - Reservoir/Pump Sensing (RE)
- Handled Concept, Design, Manufacturing, Deployment

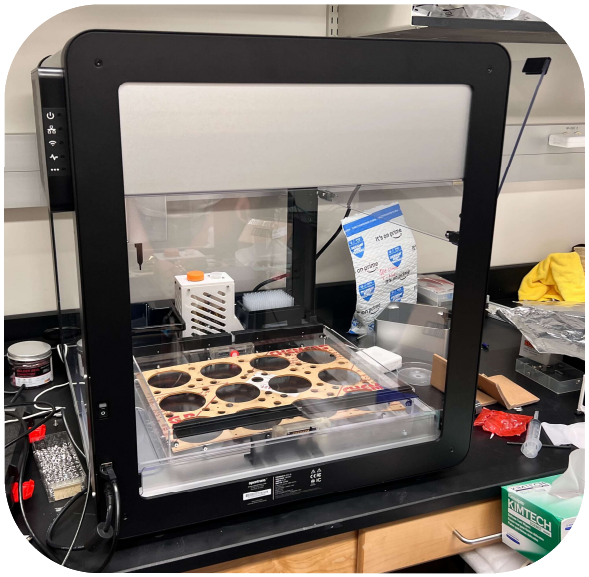

Thermoelectric Refrigeration System

- Concept Generation
  - Design Decision Matrix
  - Initial Design Specifications & Calculations
    - Estimated ~20W of cooling capacity w/o losses
    - Estimated ~40W of cooling capacity w/ losses

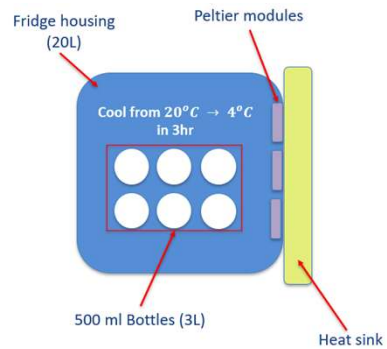

$$Q = mc\Delta T$$

m : mass of fluid and/or air
c : specific heat of fluid and/or air
ΔT : temperature difference between inside outside of fridge

Cooling Capacity Needed: 20.03 W

Refridgerator Performance Decision Matrix				
Design boundary elements	**Weight (1-5)**	**COTS Fridge**	**COTS Refrid. Module**	**DIY Peltier System**
Insulation	5	5	3	2
Prevent Ice Build Up	2	2	2	4
Integration with rest of system	5	1	2	4
Customizability	4	1	4	5
Efficiency	2	5	4	2
Maintenance	3	1	2	3
Cost	3	4	3	1
Total score		63	68	74
Rank		3	2	1

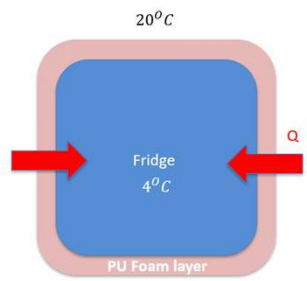

Top View of Fridge

$$Q = \frac{T_{ambient} - T_{internal}}{R_{conv-ambient} + R_{cond} + R_{conv-int}}$$

$R_{conv-ambient}$: convective thermal resistance from ambient
R_{cond} : conductive thermal resistance from insulation material
$R_{conv-int}$: convective thermal resistance from fridge internal

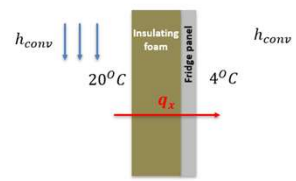

1D Plane wall assumption

Thermoelectric Module Selection

- Proof of Concept Vessel
  - 3D Printed with PLA
  - Thermocouple feeding continuous Temperature vs Time data

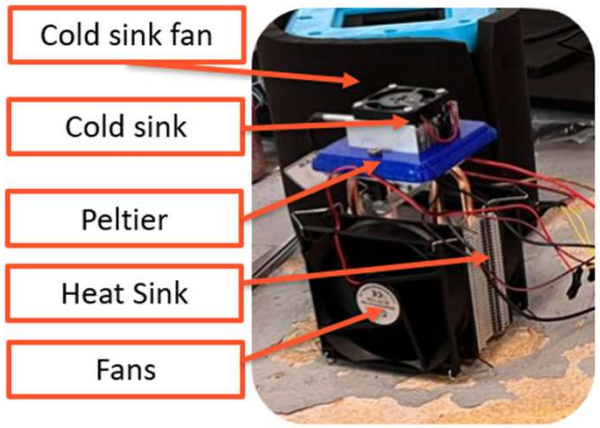

Peltier Assembly

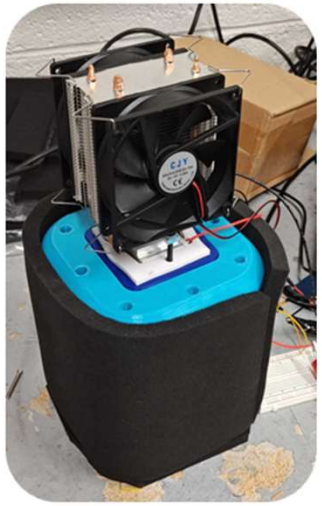

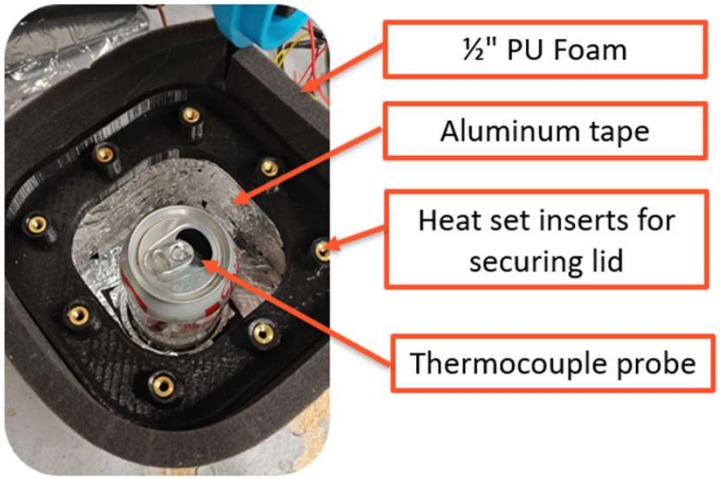

Thermoelectric Module Selection

TEC1-12710 MODULE

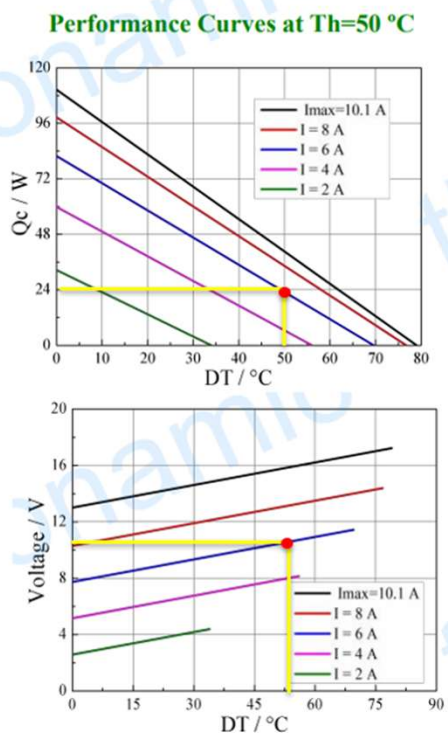

Operating parameters		
	Actual	**Expected**
Voltage	10V	10V
Current	2.7A	6A
Internal Resistance	3.75Ω	1.67Ω
Heat Pump Capacity	$\sim 5W$	24W

Thermoelectric Module Selection

HP-127-1.4-1.15-71 MODULE

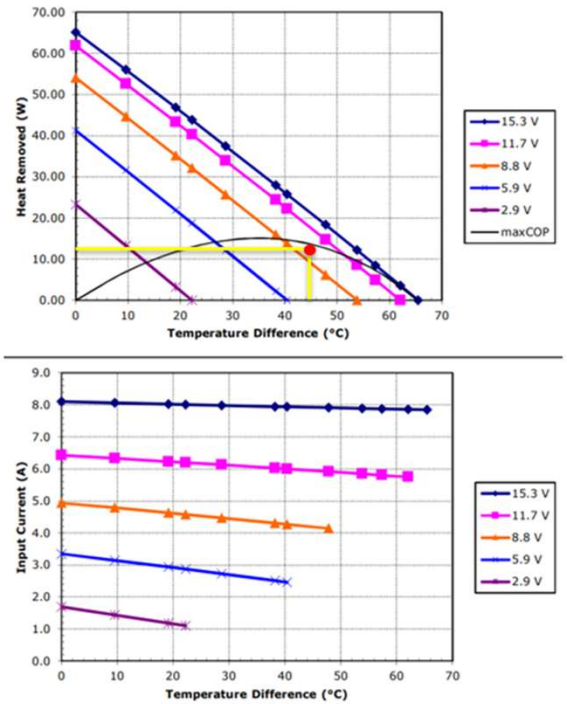

Operating parameters		
	Actual	**Expected**
Voltage	10V	10V
Current	5A	4.5A
Internal Resistance	2Ω	2.2Ω
Heat pump capacity	~7W	11W

Not final operating parameters

Prototype Production & Testing

- 8020 Extrusion + Aluminum Panel Construction

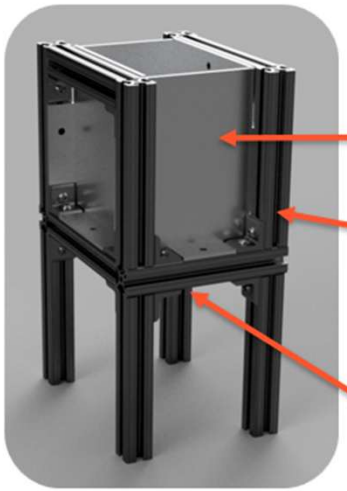

Prototype Testing

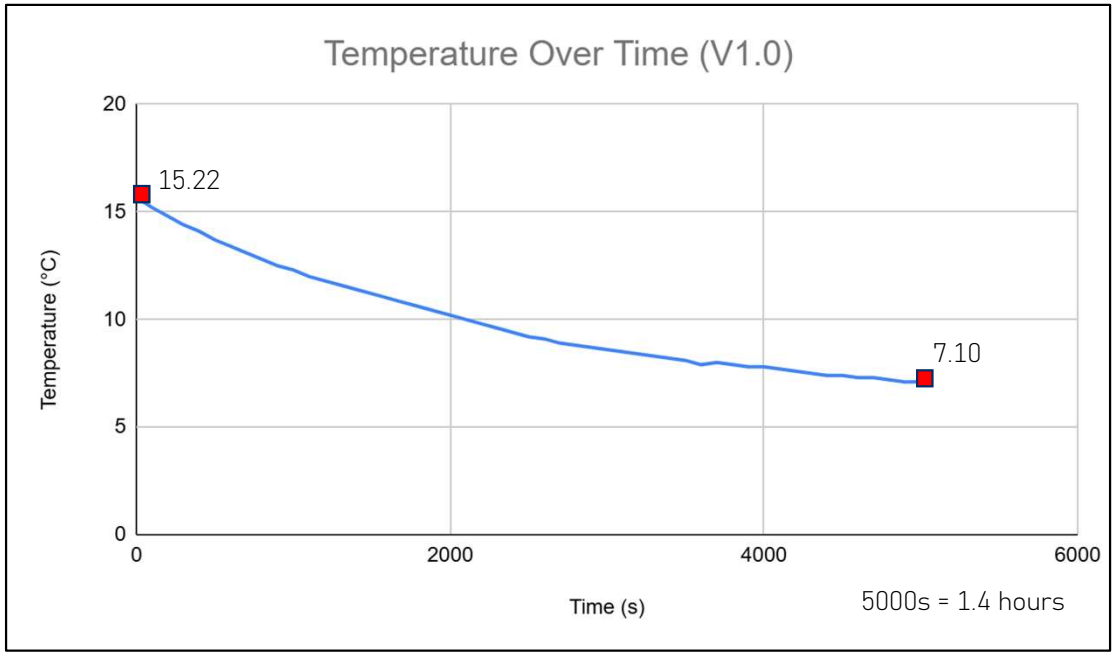

Cooling Capacity	
	Experimental
Peak	4.76 W
Average	2.55 W
End	1.04 W

Loss to Environment	
	Theoretical
Average	~15.45 W

1x 18 W Total Theoretical Capacity

Prototype Production & Testing

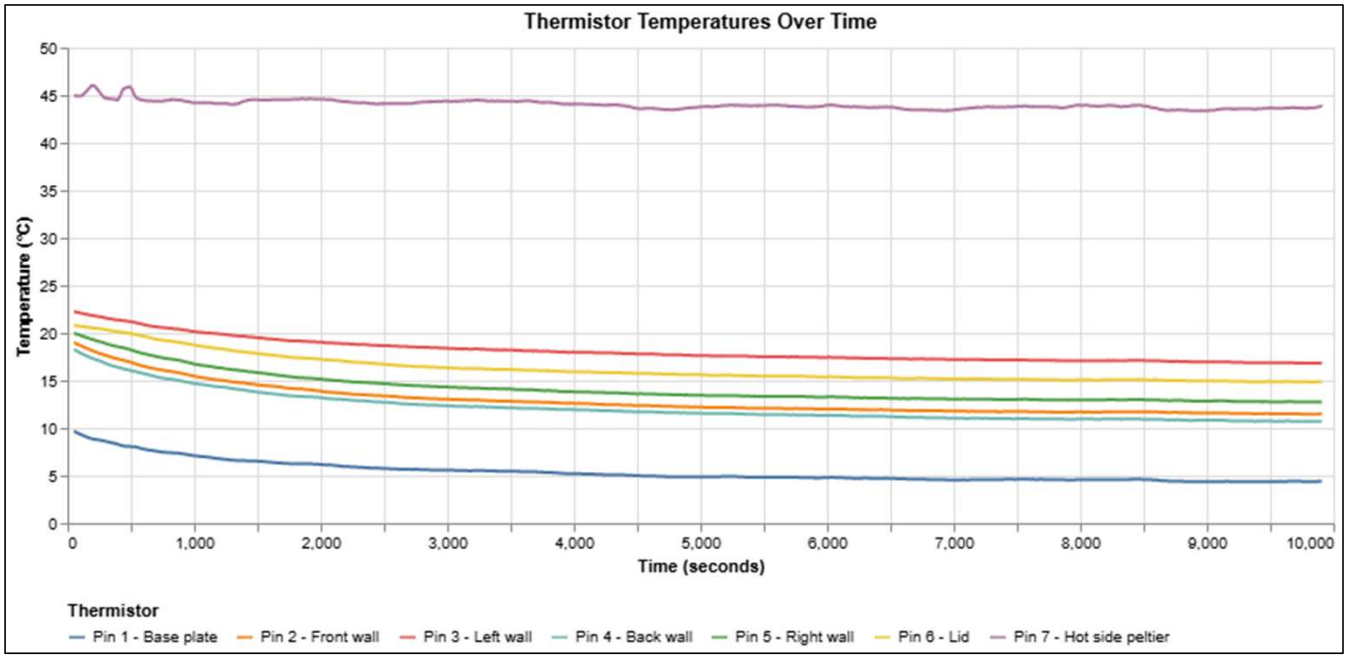

- Lab calibrated thermistors
- Cold plate recorded <5C
- Hot side temp of 45C was higher than expected
- Side walls showed little change from ambient

Prototype (V1.1) Iteration

- Desire to improve Prototype V1 to achieve 4C fluidic temperature
  - Minimal budget expenditure

- Improved insulation
- Improved lid sealing

Use of clamps for improved sealing

Plastic Spacers for Insulation

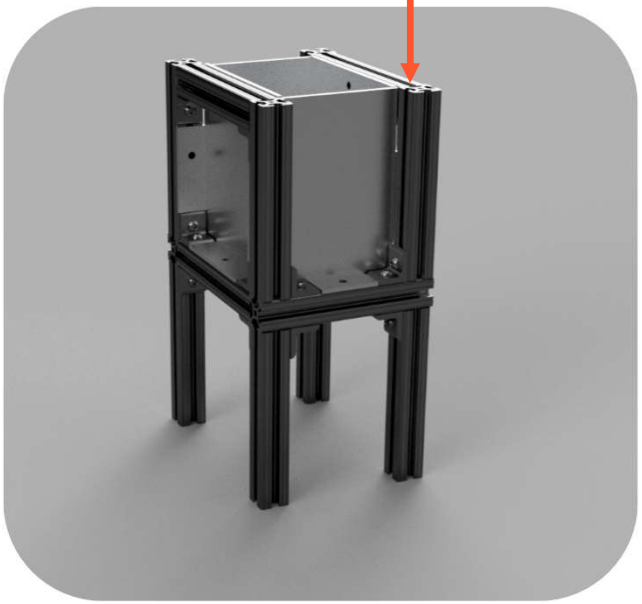

Prototype (V1.1) Testing

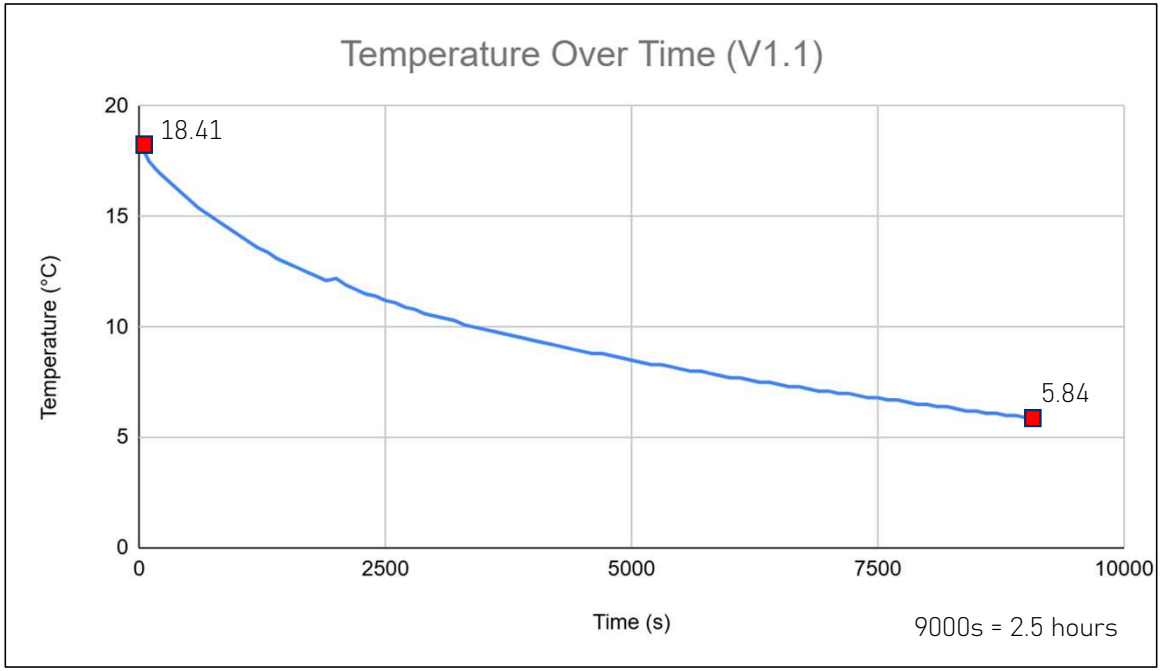

Average lower due to lower end capacity

Cooling Capacity	
	Experimental
Peak	5.8 W
Average	2.06 W
End	<0.5 W

Loss to Environment	
	Theoretical
Average	~15.94 W

1x 18 W Total Theoretical Capacity

High Risk Decisions

- Prototype provided valuable data but did not achieve target temperatures
- Parallelized development

Prototype V1.1
↓
Prototype V1.2

- Cooling Module Improvements
- Used for continuous cycle testing

Achieved **4.4C** with improved cooling modules

Production Development

- Utilize Prototype V1.1 and V1.2 Data to create predictions

Theoretical Data

Assumptions:

- Isothermal environment within fridge box
- 1D steady state conduction
  - Simplified relative comparison
- Uniform insulation profile
  - Conservative assumption in favor of V1.1

1D Heat Gain (Conduction)		
	Prototype V1.1	**Production Model**
Surface Area (Average)	$0.1211\ \mathrm{m}^2$	$1.0157\ \mathrm{m}^2$
Insulation Thickness	0.50”	2.0”
Thermal Conductivity	Polyurethane 0.026 W/m·K	Polystyrene 0.035 W/m·K
Heat Gain	3.97 W	11.20 W
Heat Gain (Scaled)	**26.74 W**	**11.20 W**

Scaled for Equivalent Surface Area

Production Design

- 8020 Aluminum Framing
- Sheet Metal Construction
  - Bent 1/8" & 1/4" 5052 H32 Aluminum
  - Economical vs Welding/Deep Drawing
- "Floating" Basket Design
  - Superior insulation from all angles
- Conductive Bottle Holder
  - Bent 1/8" 5052 H32 Aluminum
  - Pseudo-Cold Sink

CAD Render of Bottle Holders

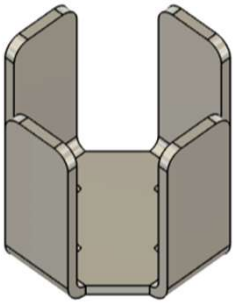

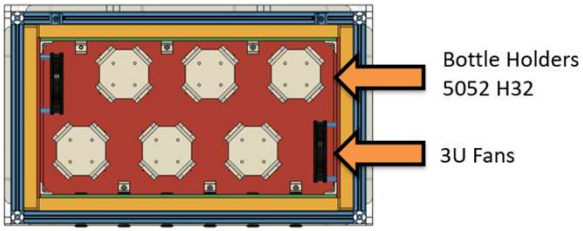

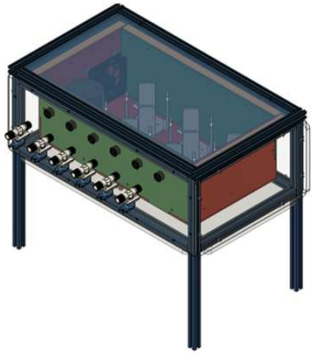

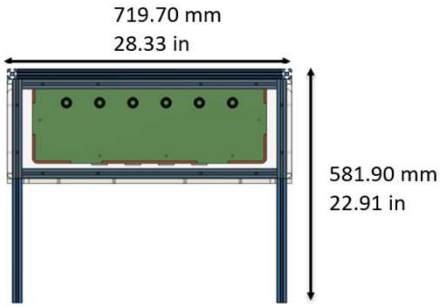

Production Design

- Rigid Polystyrene Foam Insulation
  - Stronger insulation performance vs PU
  - Ease of Assembly
- Tested and validated cooling module upgrade
- Modular design for added capability (Contingency)

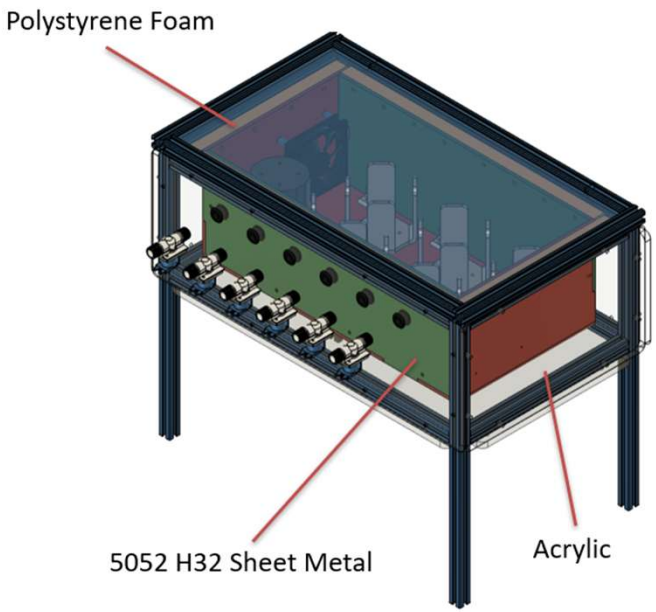

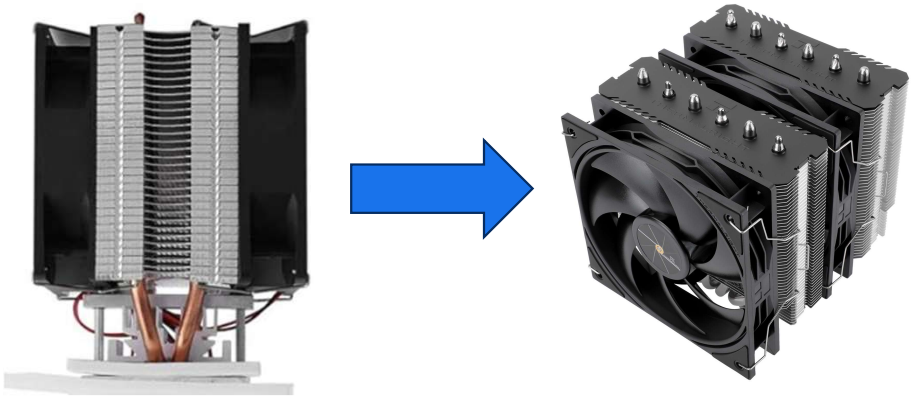

Production Design

Insulation Strategy

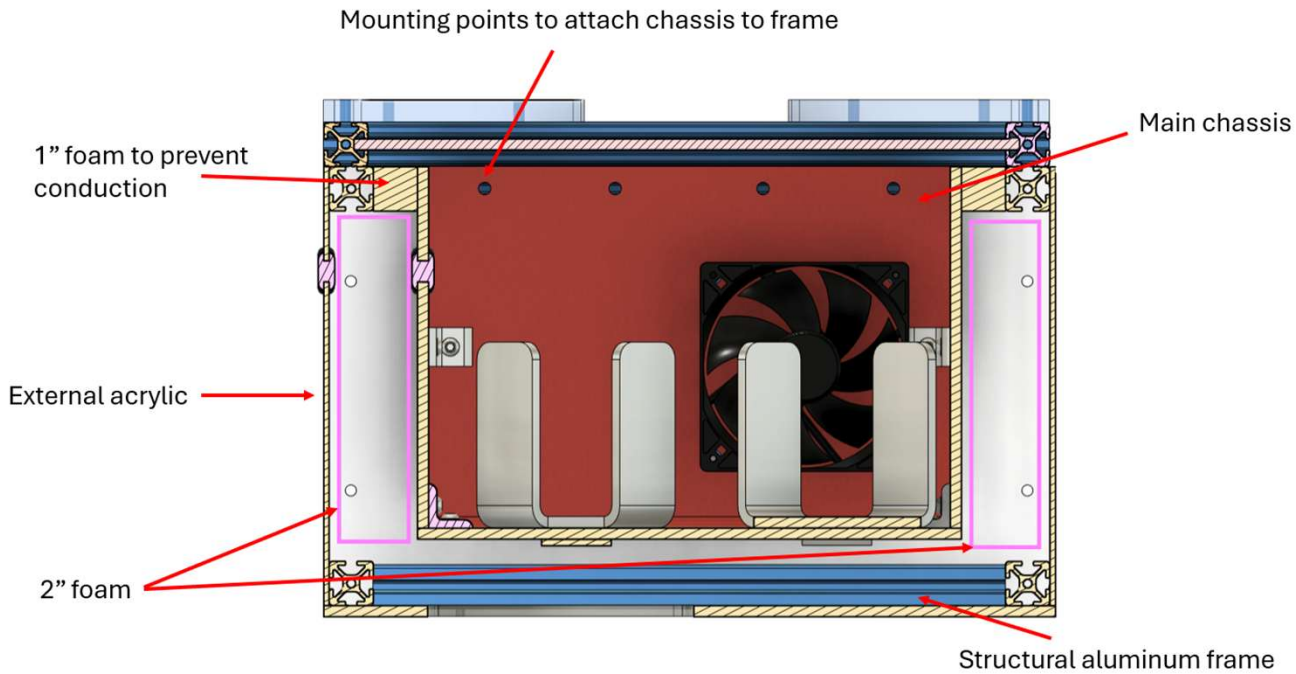

Production Product

2" Polystyrene Insulation

Improved Cooling Modules

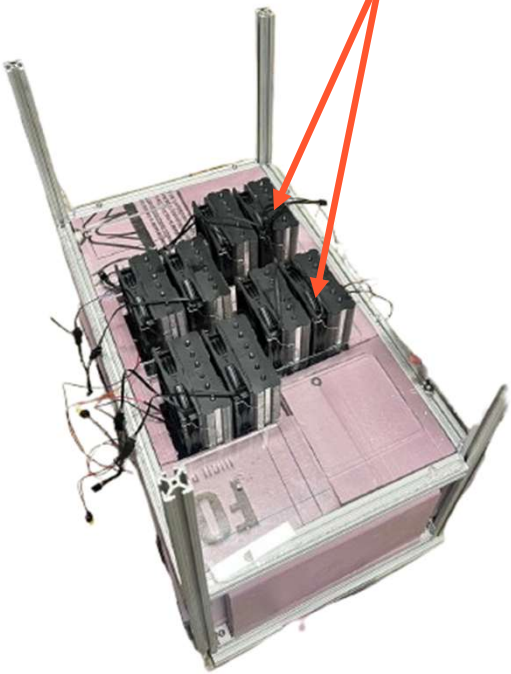

6x Bottle Holders

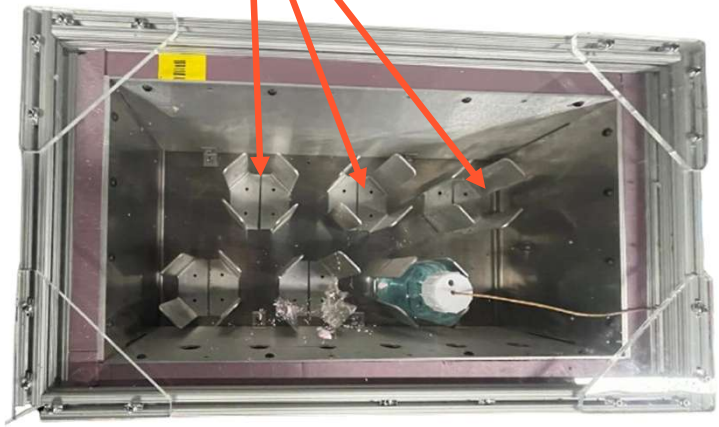

Interior View

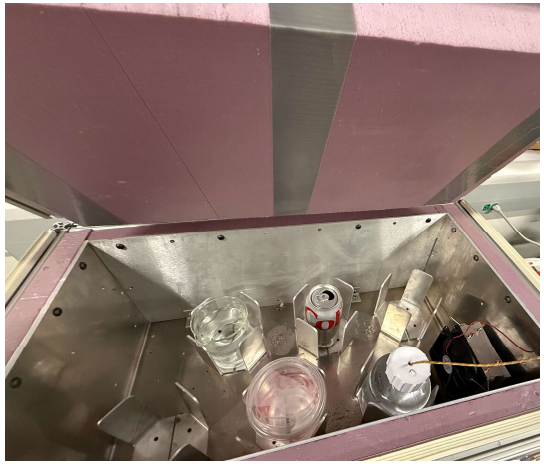

Production Testing

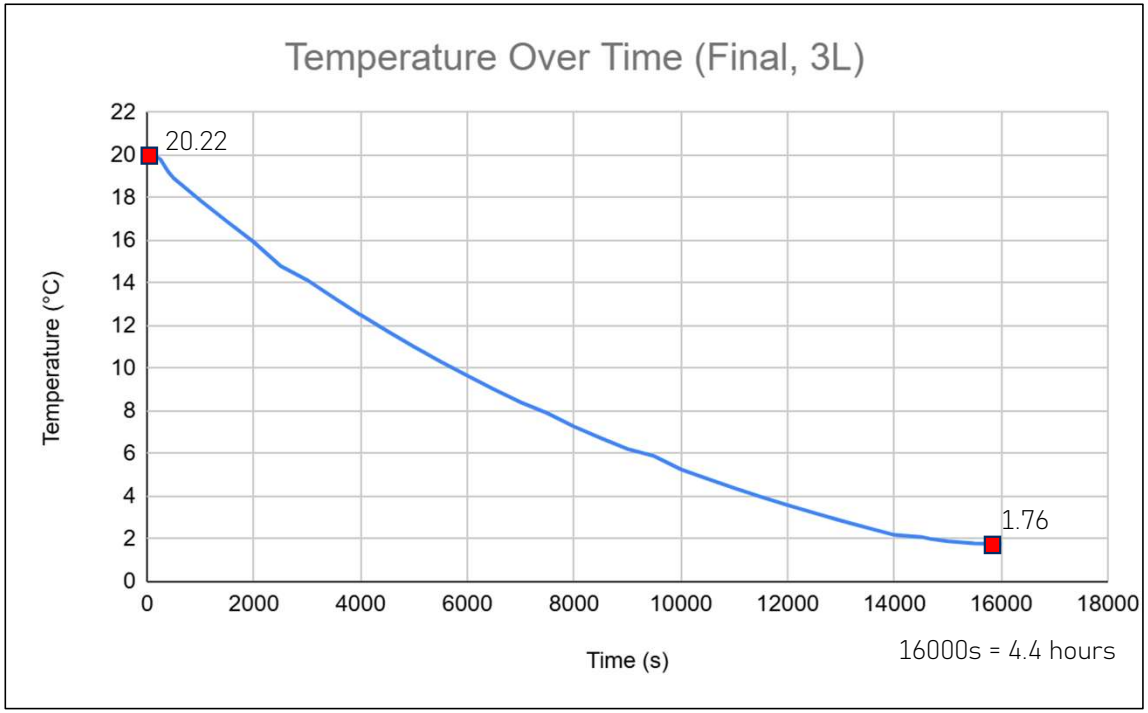

Cooling Capacity	
	Experimental
Peak	27.7W
Average	14.5W
End	2.5W

Loss to Environment	
	Theoretical
Average	57.5W

Cooling Capacity/Loss Ratio ~2X Proto V1.1

4x 18 W = 72 W Total Theoretical Capacity